Fig. 53: Power Windows Circuit

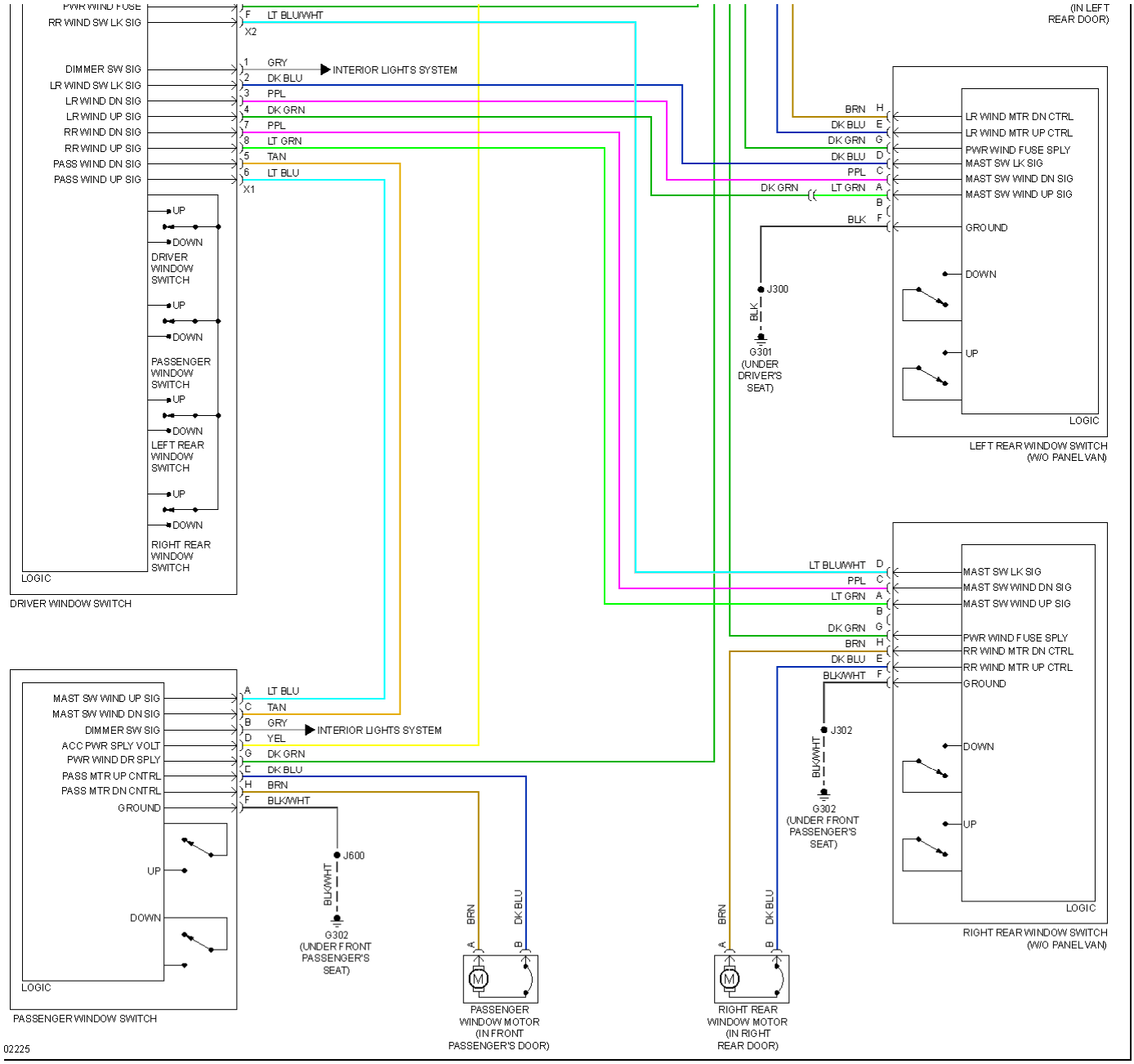

© 2011 Mitchell Repair Information Company, LLC.